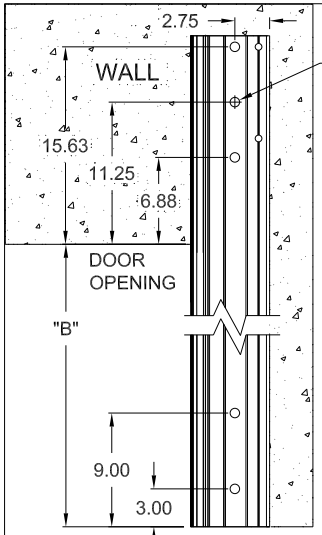

DETAIL A
MOUNTING HOLE LOCATIONS
TYP BOTH SIDE COLUMNS

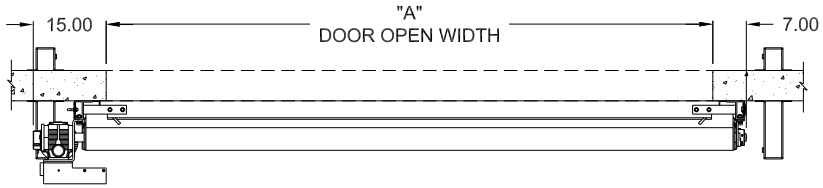

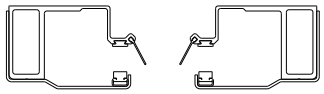

SIDE COLUMN PROFILE

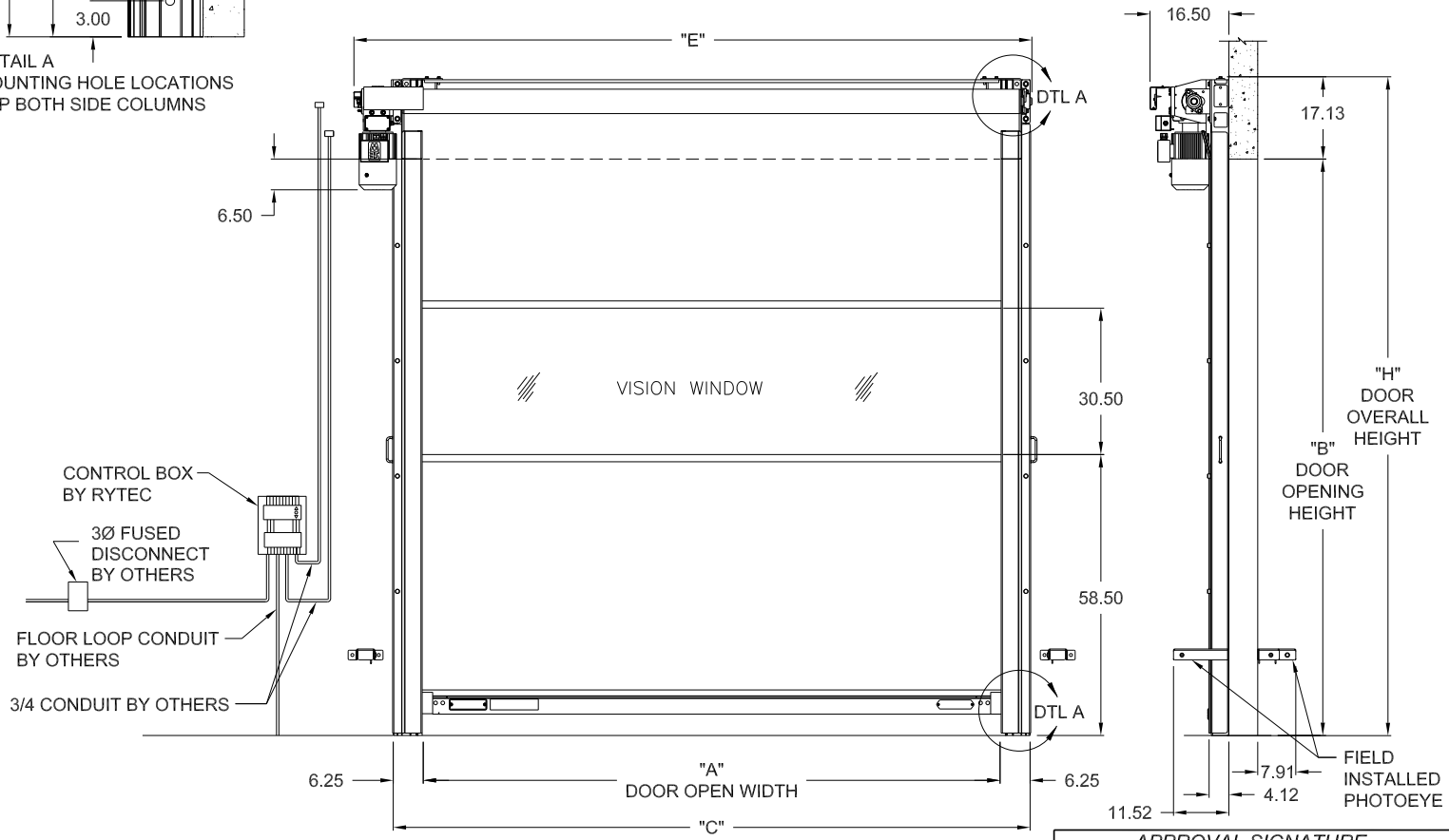

DRAWING NOT TO SCALE, ALL DIMENSIONS IN INCHES

DOOR NO.	A	B	C	E	H

MODEL

MODEL: PHARMA–ROLL

PANEL MATERIAL
- ☐ 32 OZ VINYL
- ☐ 2–PLY RILON
- ☐ 3–PLY RILON
- ☐ OTHER _____

PANEL COLOR
- ☐ BLUE
- ☐ ORANGE
- ☐ OTHER _____

ELECTRICAL OPTIONS

- ☐ 460v – 3ph
- ☐ 230v/208v – 3ph
- ☐ 230v/208v – 1ph
- ☐ 575v – 3ph
- ☐ OTHER

STANDARD FEATURES

1. WIRELESS BOTTOM BAR (NO COIL CORD)
2. SEMI–AUTOMATIC SELF REPAIRING BOTTOM BAR
3. CLEAR VISION WINDOW, FULL WIDTH
4. (2) SAFETY PHOTOEYES (FIELD INSTALLED)
5. SYSTEM 4 AC DRIVE
6. DUAL AIR REVERSING EDGE

STANDARD OPTIONS

- ☐ SLANT HOOD (SEE NOTES)
- ☐ RIGHT HAND DRIVE (LH STD.)
- ☐ 575/460V STEP DOWN TRANSFORMER INCULDED IN RYTEC CONTROL BOX
- ☐ ROTARY DISCONNECT (NOT FUSED)
- ☐ TEMP < 50° REQR LOW TEMP PVC
- ☐ OTHERS (DESCRIBE IN NOTES)

ACTIVATION

- ☐ __ PHOTOEYE
- ☐ __ PULL CORDS
- ☐ __ MOTION DETECTOR
- ☐ __ RADIO CONTROL
- ☐ __ PUSHBUTTON
- ☐ __ FLOOR LOOP
- ☐ OTHERS (DESCRIBE IN NOTES)

OPTION NOTES

NOTES:

APPROVAL SIGNATURE

FABRICATION CAN PROCEED ACCORDING TO THE SPECIFICATION SHOWN EXCEPT AS NOTED

APPROVED BY:

PRINT NAME:_____

SIGNATURE: _____

DATE: _____

RYTEC CORPORATION

ONE CEDAR PARKWAY, JACKSON, WI 53037–0403

APPROVAL DRAWING
PHARMA-ROLL? - SYSTEM 4

CUSTOMER:

LOCATION:

DATE: 11/29/11

DRAWING NO.: 401154–00T

REV.: –